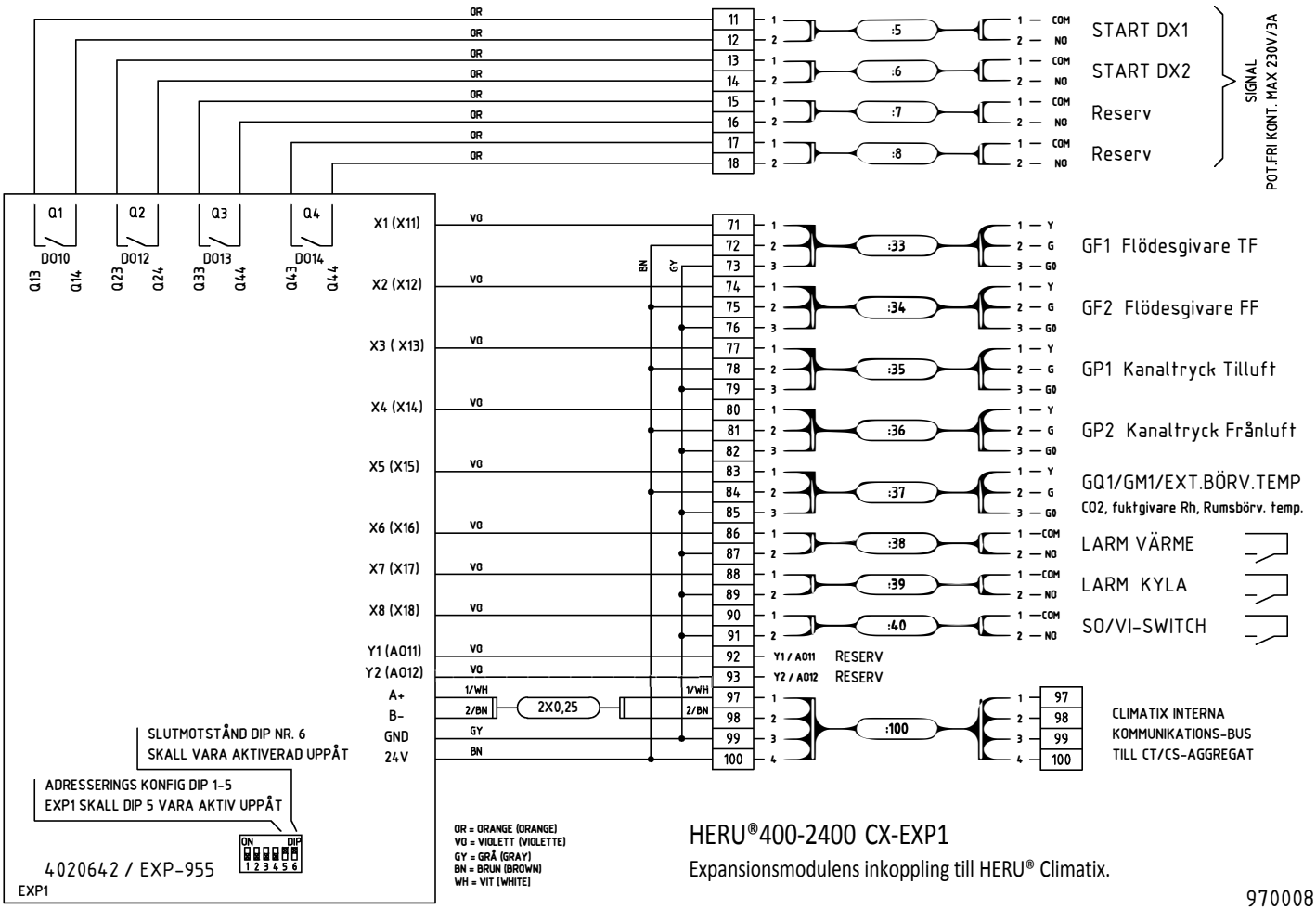

HERU®400-2400 CX-EXP1

Expansionsmodulens inkoppling till HERU® Climatix.

9700080SE